Tarnwest ltd.
Security Products from stock

355, Bury Old Road, Prestwich,
Manchester M25 1PY. United Kingdom
Tel: 0161 798 8084 Fax: 0161 773 1509
Email: sales@tarnwest.com
Internet: www.tarnwest.com

Pop-out T Handle and Plug Lock

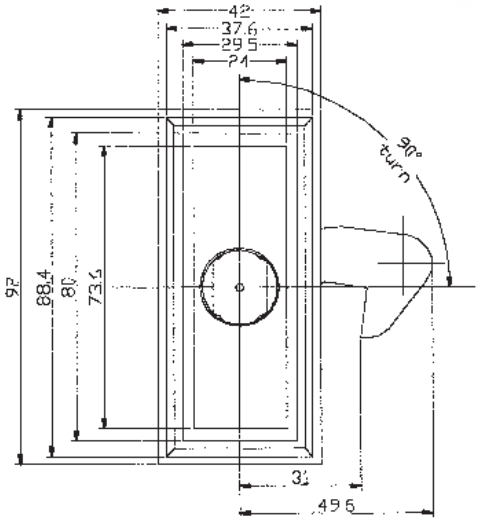

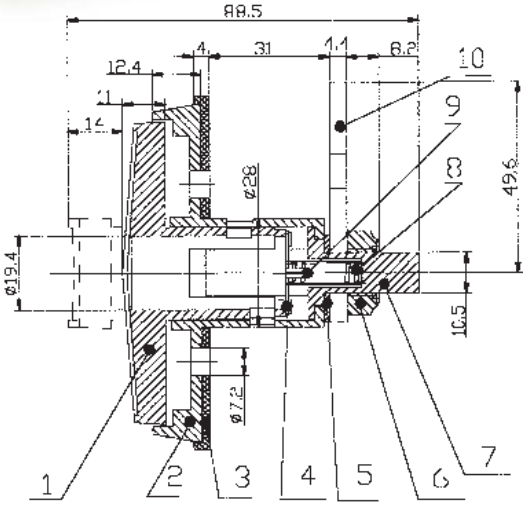

NO.	COMPONET	MATERIAL	FINISH
1	T-BRACKET	YX04S	CHROME PLATED
2	PUSHING PLATE	YX041	CHROME PLATED
3	PLASTIC PAD	PVC	BLACK
4	SPRING PAD	65	ZINC PLATED
5	STOP CAM	Q235	ZINC PLATED
6	NYLON NUT	Q235	ZINC PLATED
7	CONNECT SHAFT	YX041	NONE
8	SPRING	3D-13	NONE
9	SPRING FIXED	55Mn	NONE
10	CAM	Q235	ZINC PLATED

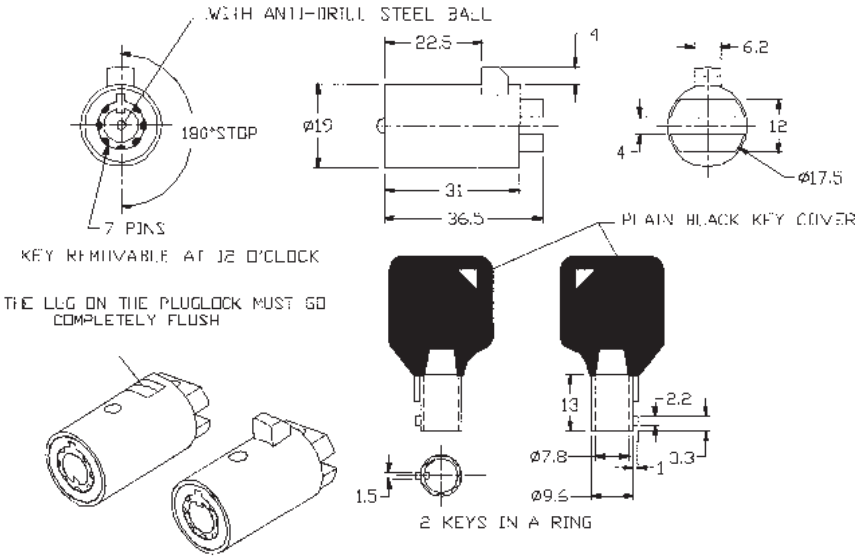

COMPONENT	MATERIAL	FINISH
OUTER HOUSING	ZINC ALLOY	BRIGHT CHROME
INNER HOUSING	ZINC ALLOY	BRIGHT CHROME
SPINDLE	ZINC ALLOY	BRIGHT CHROME
LUG	ZINC ALLOY	BRIGHT CHROME
COLLAR	ZINC ALLOY	
KEY	STEEL	NICKEL PLATE
PIN TUMBLERS	BRASS	