355, Bury Old Road, Prestwich,
Manchester M25 1PY. United Kingdom
Tel: 0161 798 8084 Fax: 0161 773 1509
Email: sales@tarnwest.com
Internet: www.tarnwest.com

HDL- 07552 L-Handle Lock

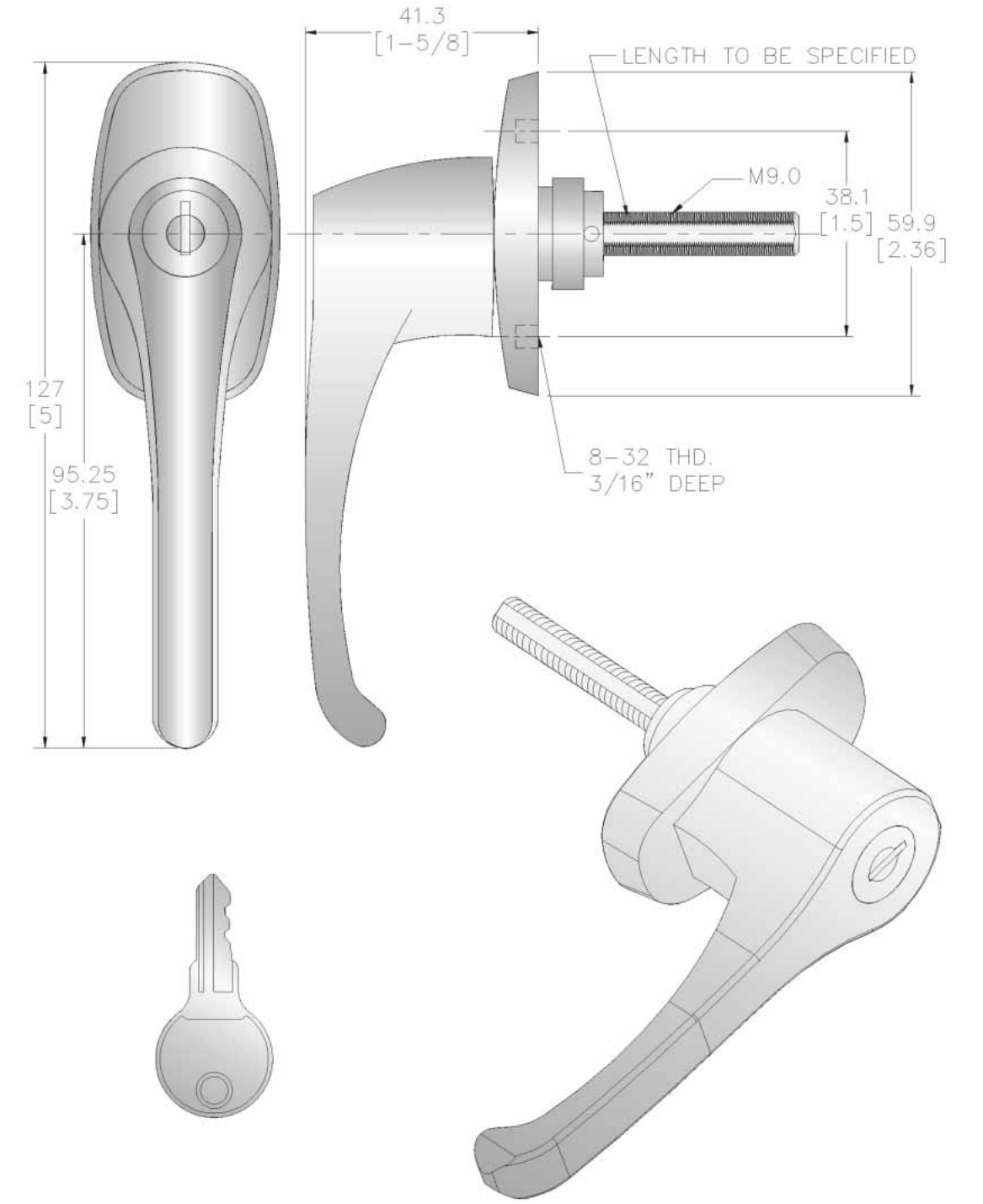

- High strength zinc alloy
- Polished bright chrome
- 5 wafer disc lock for more than 200 key codes
- Accessories attached